HAMILTON PENDENT LAMP

LODAMER

HAMILTON PENDENT LAMP

L O D A M E R

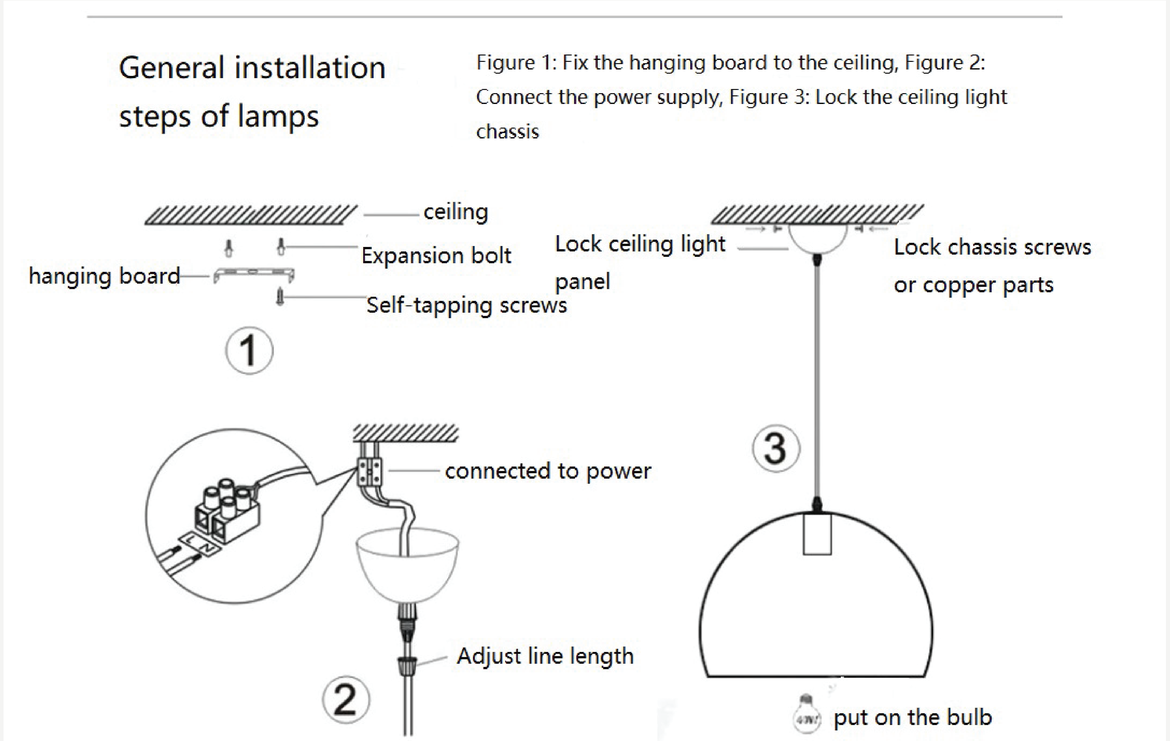

Glass Colour :	Clear
Size :	D20CM,D25CM & D30CM
Cord :	150CM
Light Source :	E27*1
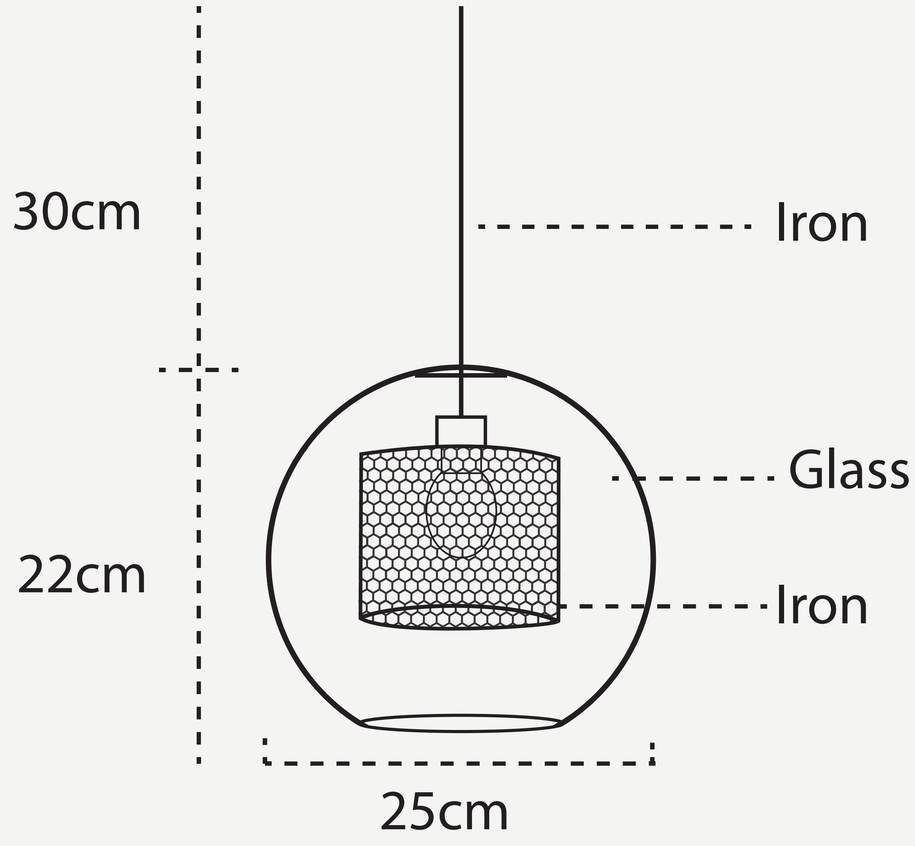
Finish :	Iron
Power Source :	AC
Light Source :	LED Bulbs
Voltage :	220V
Lighting Zone :	5 - 10m2
Material :	Matel+Glass